firmware update of a DU-EP801 (EP801) or DU-EP600 (EP6) drive unit with the Windows based *miniMax* - program

Take care:

This document is currently only valid up to and including drive unit firmware 4.2.2!

We are currently processing corresponding optimization measures for the new firmware versions 4.2.3 and 4.3.0 released by Shimano on June 25, 2024.

Please contact us via email before updating to these new firmware versions.

Legal notice

Using the ***miniMax*** - software, the legally regulated speed limit for the motor support of a bicycle with Shimano STePS drive unit could be increased.

Using this software could invalidate the official approval and homologation for road service and warranty of the bicycle.

A bicycle modified with this software may only be used on closed or private terrain if some settings have been changed.

No liability is accepted for any damage to objects and / or people that may occur now or in the future through the use of the ***miniMax*** - software.

The user of this software acts knowingly and responsibly!

Using the Windows-based ***miniMax*** software, a cable-bound SM-PCE02 interface and a license key that matches the bike, it is possible to update the max. speed of the motor support of a DU-EP801 (EP801) or DU-EP600 (EP6) or of the corresponding "RS" or "CRG" version to **max. 50km/h with correct indication of all values on the bike display**. 😊

Please only perform the firmware update of the drive unit if you are aware of the possible consequences!

Please update all Shimano STePS components with the currently latest firmware versions with the Windows based E-Tube Project Professional software before processing the optimization with the ***miniMax*** program.

Please always use the latest version of the ***miniMax*** program which can be downloaded free of charge from the ***eMax***-Tuning website.

In order to modify or optimize the latest motor firmware of the EP801 or EP6 drive unit with the ***miniMax*** program, it is necessary that the required SM-PCE02 interface is connected directly to the motor!

To do this, the most probably existing left upper cover of the motor (which is usually secured with 3 Phillips screws) must be removed in order to gain access to the electrical connections of the motor:

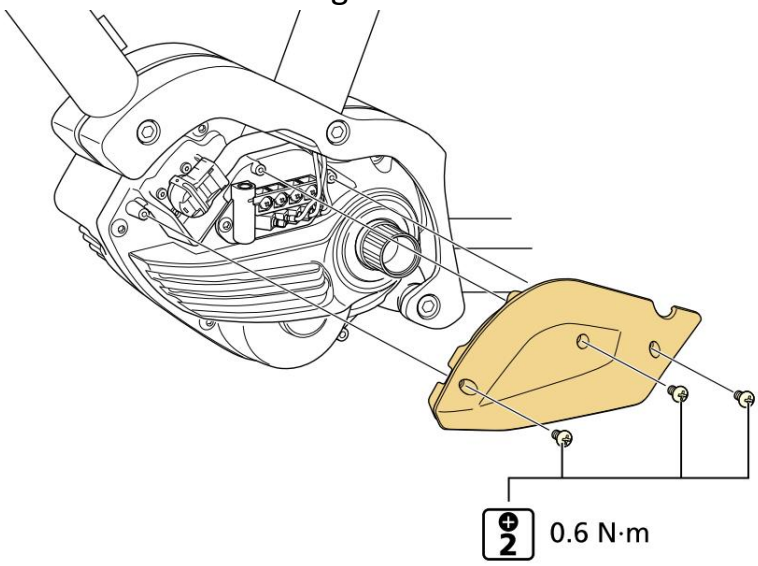

If it is difficult to get direct access to the connections on the drive unit (aka motor) on your EP801 or EP6 bike because, for example, the bike frame covers the upper left part of the drive unit and the drive unit has to be removed or lowered first, then maybe this document with alternative connections possibilities may help.

Additionally we also can assist you with an optimization of the bike via an Internet based remote control session of your computer, in which it is sufficient to connect the cable-bound interface to the display (SC-EN600, SC-EN610, SC-EM800) or the left-hand control unit (SW-EM600-L) of the bike.

If you are interested in this or have any questions, please send an email to info@eMax-tuning.com.

First, all cables of the Shimano STePS bus system that are plugged into the front facing left 3 receptacles of the drive unit must be temporarily disconnected from the drive unit:

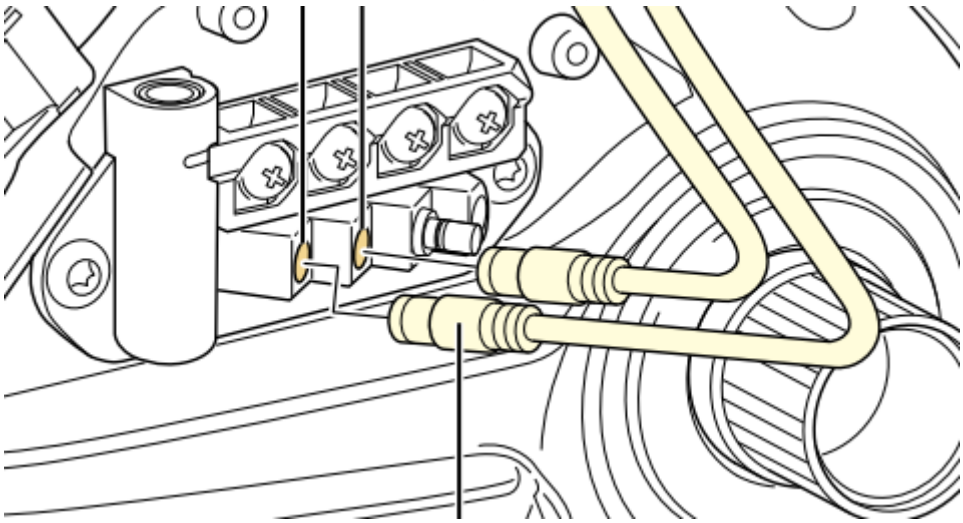

In addition, the big front facing left battery connector on the drive unit must also be temporarily disconnected. To do this, pull the handle out of the plug to make it easier to remove the plug from the drive unit:

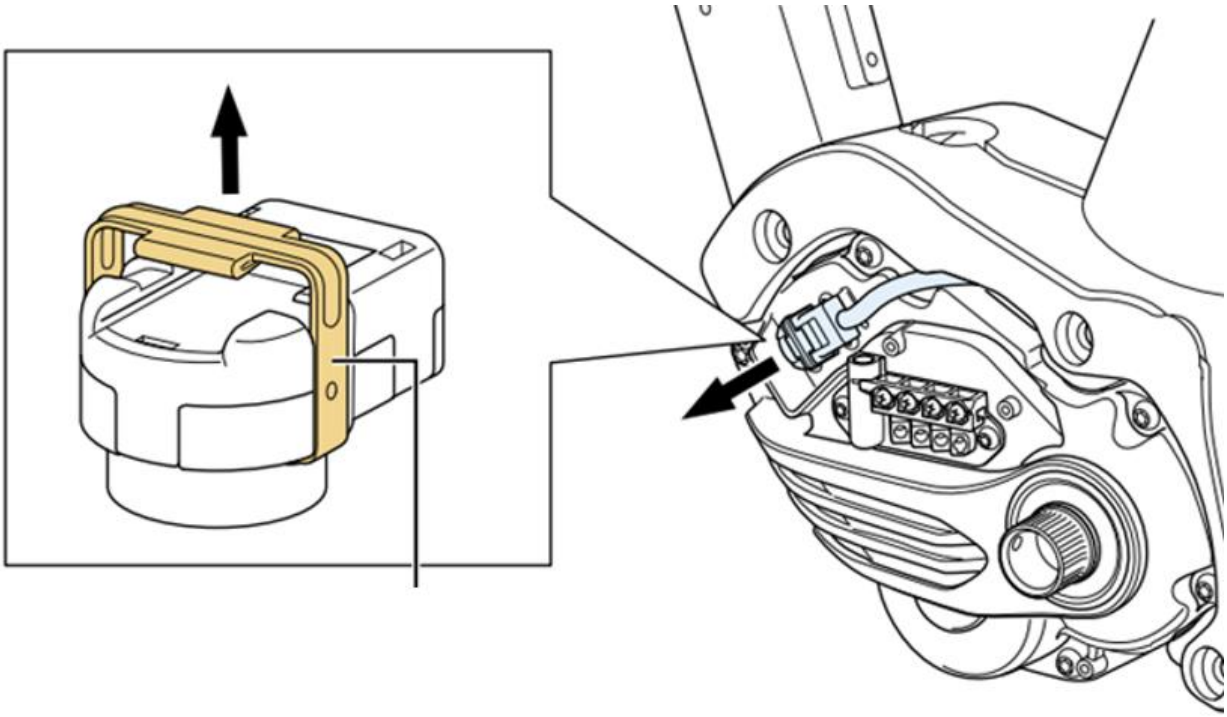

The speed sensor which is plugged into the rearmost (right) socket can remain connected to the drive unit and does not need to be removed.

Likewise, any cables connected to the screw terminals above (“LIGHT” and “ACC”) may remain connected.

A cable connected to the CAN socket can also remain connected.

Please now plug the cable from the SM-PCE02 interface into one of the front left 3 sockets:

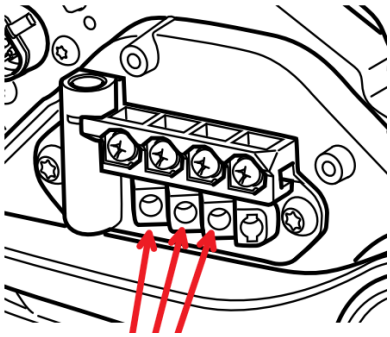

Please ensure that all necessary cables of the Shimano STePS bus system are correctly inserted (and locked with a "click" - feeling) into the corresponding receptacles. Ideally use the TL-EW300 tool for this. Please do not use pliers or similar tools to insert or remove the plug connectors as these could damage the sensitive cables or plugs! If you don´t have a special tool, then insert or remove the plug carefully with 2 fingers. Please do not pull on the cables as this could damage the cables!

The system is now prepared for a firmware update via the ***miniMax*** program.

Launch the ***miniMax*** program, activate the "**direct connection**" mode (1), open the connection to the interface with "**open port**" (2) and read the electronic data of the drive unit with "**get information**" (3).

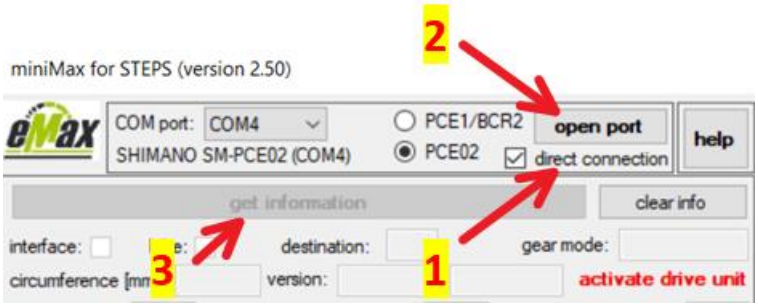

Please note the additional tooltip - help with slowly moving the mouse cursor over corresponding controls.

The firmware update is started using the "**update motor firmware**" button:

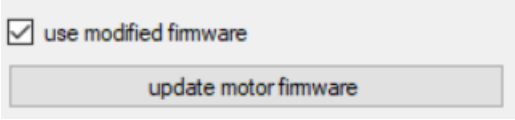

Updating the drive unit firmware via the ***miniMax*** program can take up to 5 minutes - please be patient and do not interrupt the process!

The green progress bar informs you about the current status of the programming.

In case of any problem, the drive unit usually can be brought back to a functional state using the Windows-based E-Tube Project Professional software.

Also in case of any problem, we will assist via email info@eMax-tuning.com on 7 days a week and generally respond within a maximum time of 24 hours, usually much faster.

After successfully updating the drive unit firmware, please disconnect the SM-PCE02 interface from the drive unit and reconnect the previous cables of the Shimano STePS bus system and the battery connection plug accordingly. The 3 left receptacles of the drive unit are functionally equivalent, so it doesn't matter which cable is connected to which of these receptacles.

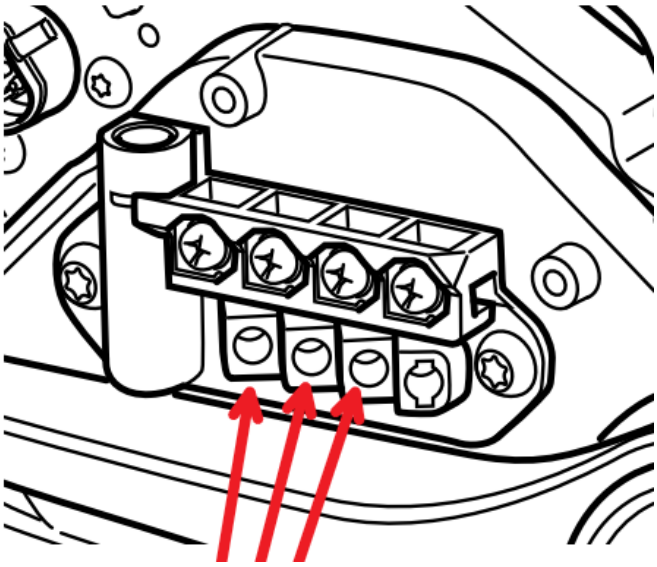

When connecting the battery connector, make sure that it is pushed on carefully and straight so as not to bend any contacts: